REV	RFA #	DESCRIPTION OF REVISION	ENG APPD	DATE
A	392826	PRODUCITION RELEASE	WIM	08-12-05

PRODUCT AREA	DIM #	MEASUREMENT
TOP HOUSING TO CONN-RIM	1	GAPS

GAP			OFF SET	
DIM NO.	MIN	MAX	MIN	MAX
1	0	0.05	X	X

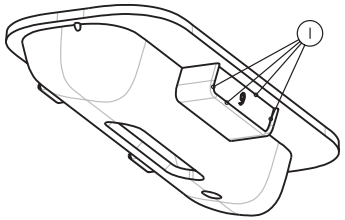

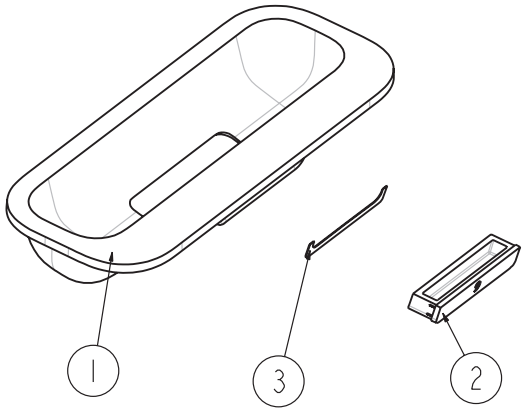

7. SMUDGE: NO VISIABLE SMUDGES OR FINGER PRINTS ON ANY SURFACES.
8. ALL THE SHARP EDGES ON THE DOCK TO BE CRISP WIHT NO FLASH AND NO NICKS
9. FOR CLEANING OF SURFACES USE SOFT CLOTH ONLY

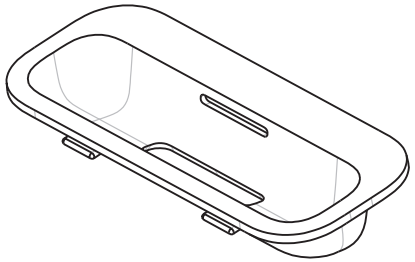

ITEM	PART NUMBER	NAME
1	815-8461	DOCK INSERT, M25S
2	815-8488	DOCK PLUG, M25S
3	907-0337	VHB, A44

DIMENSIONS ARE IN MILLIMETERS
TOLERANCES
(UNLESS OTHERWISE SPECIFIED)

0 - 2	± 0.05
2 - 10	± 0.08
10 - 50	± 0.10
50 - 100	± 0.15
100 - 200	± 0.20
> 200	± 0.30

ANGLES ± 0.5°

DO NOT SCALE DRAWING

METRIC

DRAWN	DUNCAN	DATE 04-22-05
DESIGN	EVANS	DATE 04-22-05
PRO/E CAD MODEL	603-7566-01	
SCALE	3/2	

THIRD ANGLE PROJECTION

Apple Computer, Inc.

NOTICE OF PROPRIETARY PROPERTY:
THE INFORMATION CONTAINED HEREIN IS THE PROPRIETARY PROPERTY OF APPLE COMPUTER, INC. THE POSSESSOR AGREES TO THE FOLLOWING:
(i.) TO MAINTAIN THIS DOCUMENT IN CONFIDENCE
(ii.) NOT TO REPRODUCE OR COPY IT
(iii.) NOT TO REVEAL OR PUBLISH IT IN WHOLE OR PART
(iv.) ALL RIGHTS RESERVED

ASSY, DOCK INSERT, 5G iPOD (30GB)

SIZE	DRAWING NO	REV
B	603-7566	A

SHEET 1 OF 1

COPYRIGHT APPLE COMPUTER, INC., 2000