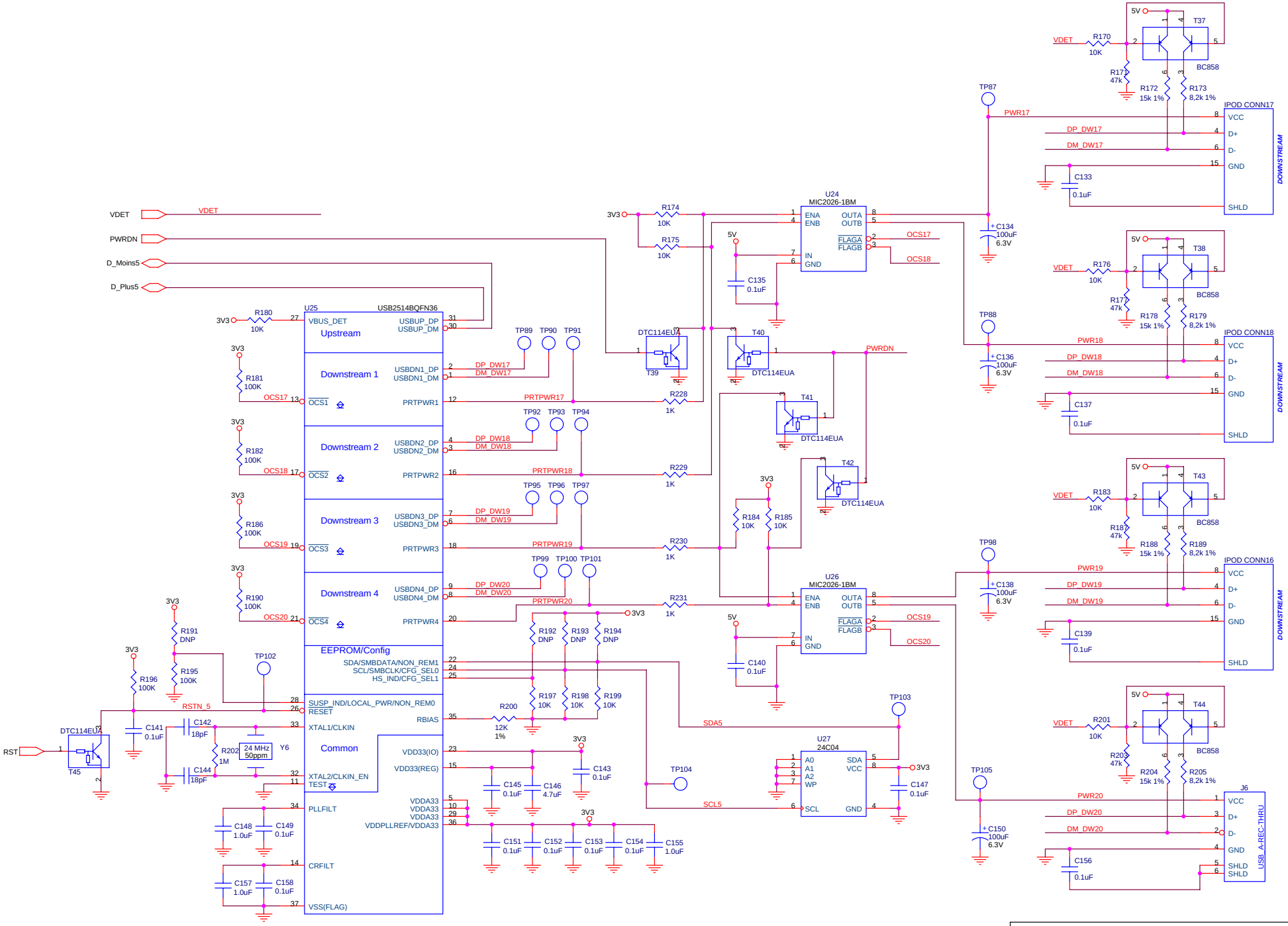
VDET
PWRDN
D_Moins5
D_Plus5
U25
USB2514BQFN36
Upstream
Downstream 1
Downstream 2
Downstream 3
Downstream 4
EEPROM/Config
Common
VBUS_DET
USBUP_DP
USBUP_DM
USBDN1_DP
USBDN1_DM
USBDN2_DP
USBDN2_DM
USBDN3_DP
USBDN3_DM
USBDN4_DP
USBDN4_DM
OCS1
OCS2
OCS3
OCS4
PRTPWR1
PRTPWR2
PRTPWR3
PRTPWR4
SDA/SMBDATA/NON_REM1
SCL/SMBCLK/CFG_SEL0
HS_IND/CFG_SEL1
SUSP_IND/LOCAL_PWR/NON_REM0
RESET
RBIAS
XTAL1/CLKIN
XTAL2/CLKIN_EN
TEST
VDD33(IO)
VDD33(REG)
VDDA33
VDDPLLREF/VDDA33
PLLFILT
CRFILT
VSS(FLAG)
DP_DW17
DM_DW17
DP_DW18
DM_DW18
DP_DW19
DM_DW19
DP_DW20
DM_DW20
PRTPWR17
PRTPWR18
PRTPWR19
PRTPWR20
RSTN_5
RST
DTC114EUA
T45
Y6
24 MHz
50ppm
U24
MIC2026-1BM
ENA
ENB
OUTA
OUTB
FLAGA
FLAGB
IN
GND
OCS17
OCS18
U26
MIC2026-1BM
OCS19
OCS20
U27
24C04
A0
A1
A2
WP
SDA
VCC
SCL
SDA5
SCL5
3V3
5V
VDET
PWR17
PWR18
PWR19
PWR20
IPOD CONN17
IPOD CONN18
IPOD CONN16
DOWNSTREAM
J6
USB_A-REC_THRU
VCC
D+
D-
GND
SHLD
BC858
KALLYSTA
Title
IP18 Board
Size
Document Number
IP18 USB Chain 5
Rev
3.0
Date:
Monday, May 23, 2011
Sheet
6
of
6