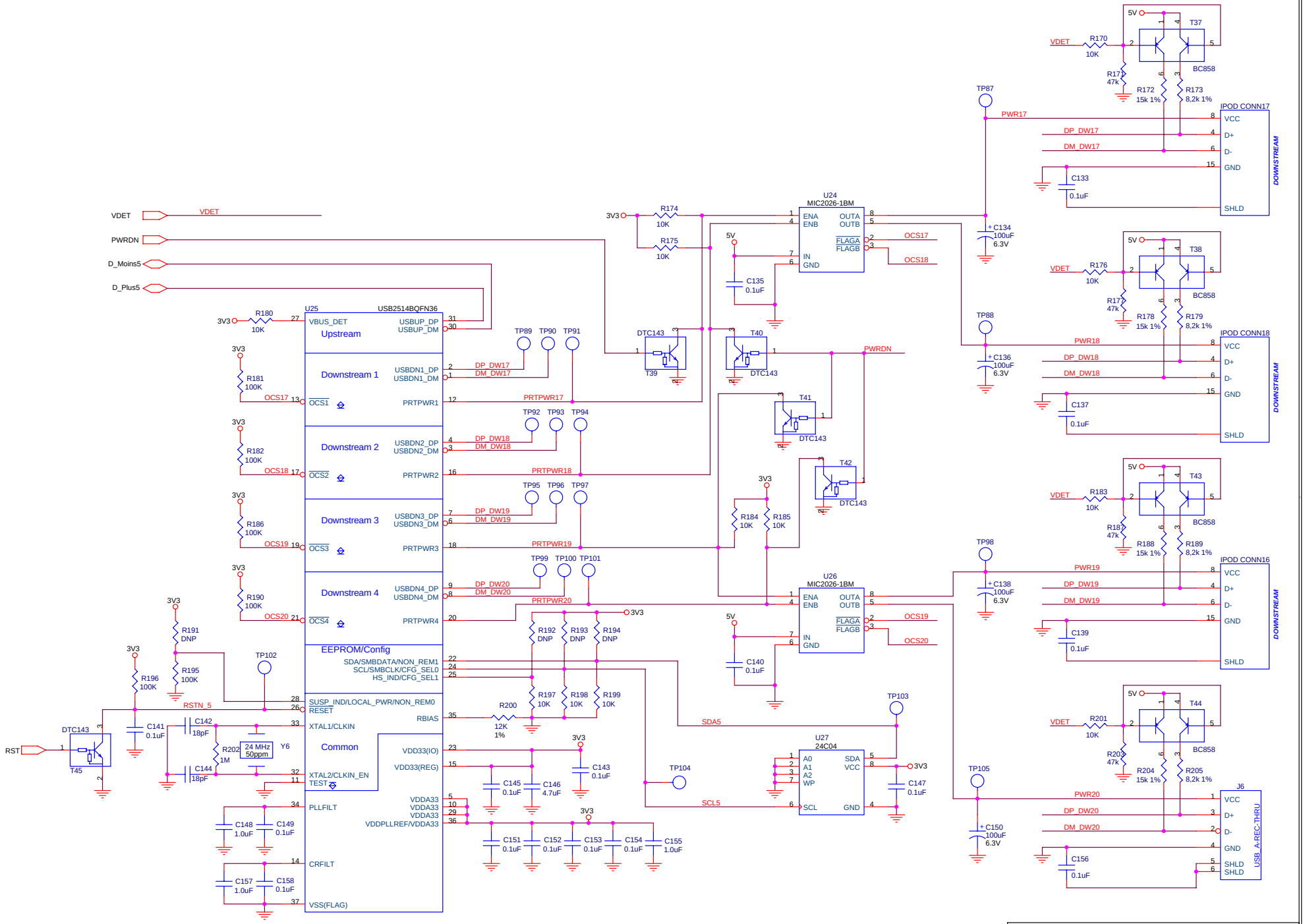

Title	**KALLYSTA**
	IP18 Board
Size	
Document Number	IP18 USB Chain 5
Rev	2.0
Date:	Thursday, March 24, 2011
Sheet	6 of 6