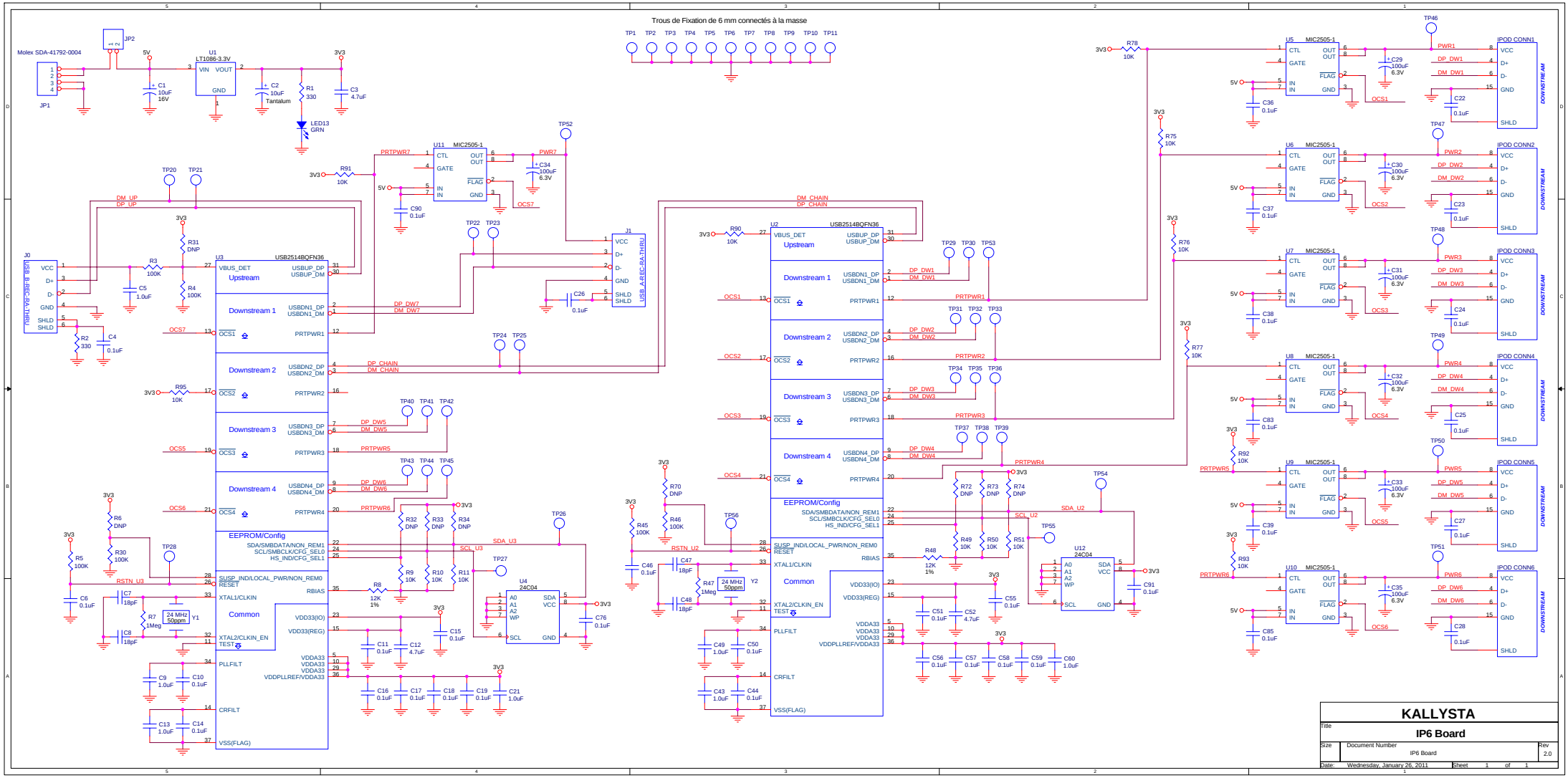
Trous de Fixation de 6 mm connectés à la masse
Molex SDA-41792-0004
JP1
JP2
U1
LT1086-3.3V
VIN VOUT
GND
C1 10uF 16V
C2 10uF Tantalum
R1 330
C3 4.7uF
LED13 GRN
U11 MIC2505-1
CTL OUT
GATE OUT
IN FLAG
IN GND
C34 100uF 6.3V
C90 0.1uF
R91 10K
J0
USB_B_REC_RA_TH/RU
VCC
D+
D-
GND
SHLD
R3 100K
R4 100K
R31 DNP
C5 1.0uF
R2 330
C4 0.1uF
U3 USB2514BQFN36
VBUS_DET
Upstream
USBUP_DP
USBUP_DM
Downstream 1
USBDN1_DP
USBDN1_DM
OCS1
PRTPWR1
Downstream 2
USBDN2_DP
USBDN2_DM
OCS2
PRTPWR2
Downstream 3
USBDN3_DP
USBDN3_DM
OCS3
PRTPWR3
Downstream 4
USBDN4_DP
USBDN4_DM
OCS4
PRTPWR4
EEPROM/Config
SDA/SMBDATA/NON_REM1
SCL/SMBCLK/CFG_SEL0
HS_IND/CFG_SEL1
SUSP_IND/LOCAL_PWR/NON_REM0
RESET
RBIAS
XTAL1/CLKIN
Common
VDD33(IO)
VDD33(REG)
XTAL2/CLKIN_EN
TEST
PLLFILT
VDDA33
VDDPLLREF/VDDA33
CRFILT
VSS(FLAG)
R6 DNP
R30 100K
R5 100K
C6 0.1uF
C7 18pF
C8 18pF
R7 1Meg
24 MHz 50ppm
Y1
C9 1.0uF
C10 0.1uF
C13 1.0uF
C14 0.1uF
R8 12K 1%
R9 10K
R10 10K
R11 10K
R32 DNP
R33 DNP
R34 DNP
C11 0.1uF
C12 4.7uF
C15 0.1uF
C16 0.1uF
C17 0.1uF
C18 0.1uF
C19 0.1uF
C21 1.0uF
U4 24C04
A0 A1 A2 WP
SDA VCC
SCL GND
C76 0.1uF
J1
USB_A_REC_RA_TH/RU
C26 0.1uF
U2 USB2514BQFN36
R90 10K
R95 10K
R70 DNP
R45 100K
R46 100K
C46 0.1uF
C47 18pF
C48 18pF
R47 1Meg
24 MHz 50ppm
Y2
C49 1.0uF
C50 0.1uF
C43 1.0uF
C44 0.1uF
R72 DNP
R73 DNP
R74 DNP
R49 10K
R50 10K
R51 10K
R48 12K 1%
U12 24C04
C91 0.1uF
C51 0.1uF
C52 4.7uF
C55 0.1uF
C56 0.1uF
C57 0.1uF
C58 0.1uF
C59 0.1uF
C60 1.0uF
R78 10K
R75 10K
R76 10K
R77 10K
R92 10K
R93 10K
U5 MIC2505-1
U6 MIC2505-1
U7 MIC2505-1
U8 MIC2505-1
U9 MIC2505-1
U10 MIC2505-1
C29 100uF 6.3V
C30 100uF 6.3V
C31 100uF 6.3V
C32 100uF 6.3V
C33 100uF 6.3V
C35 100uF 6.3V
C36 0.1uF
C37 0.1uF
C38 0.1uF
C83 0.1uF
C39 0.1uF
C85 0.1uF
OCS1
OCS2
OCS3
OCS4
OCS5
OCS6
OCS7
IPOD CONN1
IPOD CONN2
IPOD CONN3
IPOD CONN4
IPOD CONN5
IPOD CONN6
DOWNSTREAM
C22 0.1uF
C23 0.1uF
C24 0.1uF
C25 0.1uF
C27 0.1uF
C28 0.1uF
DM_UP
DP_UP
DM_CHAIN
DP_CHAIN
DP_DW1
DM_DW1
DP_DW2
DM_DW2
DP_DW3
DM_DW3
DP_DW4
DM_DW4
DP_DW5
DM_DW5
DP_DW6
DM_DW6
DP_DW7
DM_DW7
PRTPWR1
PRTPWR2
PRTPWR3
PRTPWR4
PRTPWR5
PRTPWR6
PRTPWR7
PWR1
PWR2
PWR3
PWR4
PWR5
PWR6
PWR7
SDA_U3
SCL_U3
SDA_U2
SCL_U2
RSTN_U3
RSTN_U2
TP1 TP2 TP3 TP4 TP5 TP6 TP7 TP8 TP9 TP10 TP11
TP20 TP21 TP22 TP23 TP24 TP25 TP26 TP27 TP28
TP29 TP30 TP31 TP32 TP33 TP34 TP35 TP36 TP37 TP38 TP39
TP40 TP41 TP42 TP43 TP44 TP45 TP46 TP47 TP48 TP49 TP50 TP51 TP52 TP54 TP55 TP56
KALLYSTA
Title
IP6 Board
Size
Document Number
IP6 Board
Rev
2.0
Date: Wednesday, January 26, 2011
Sheet 1 of 1