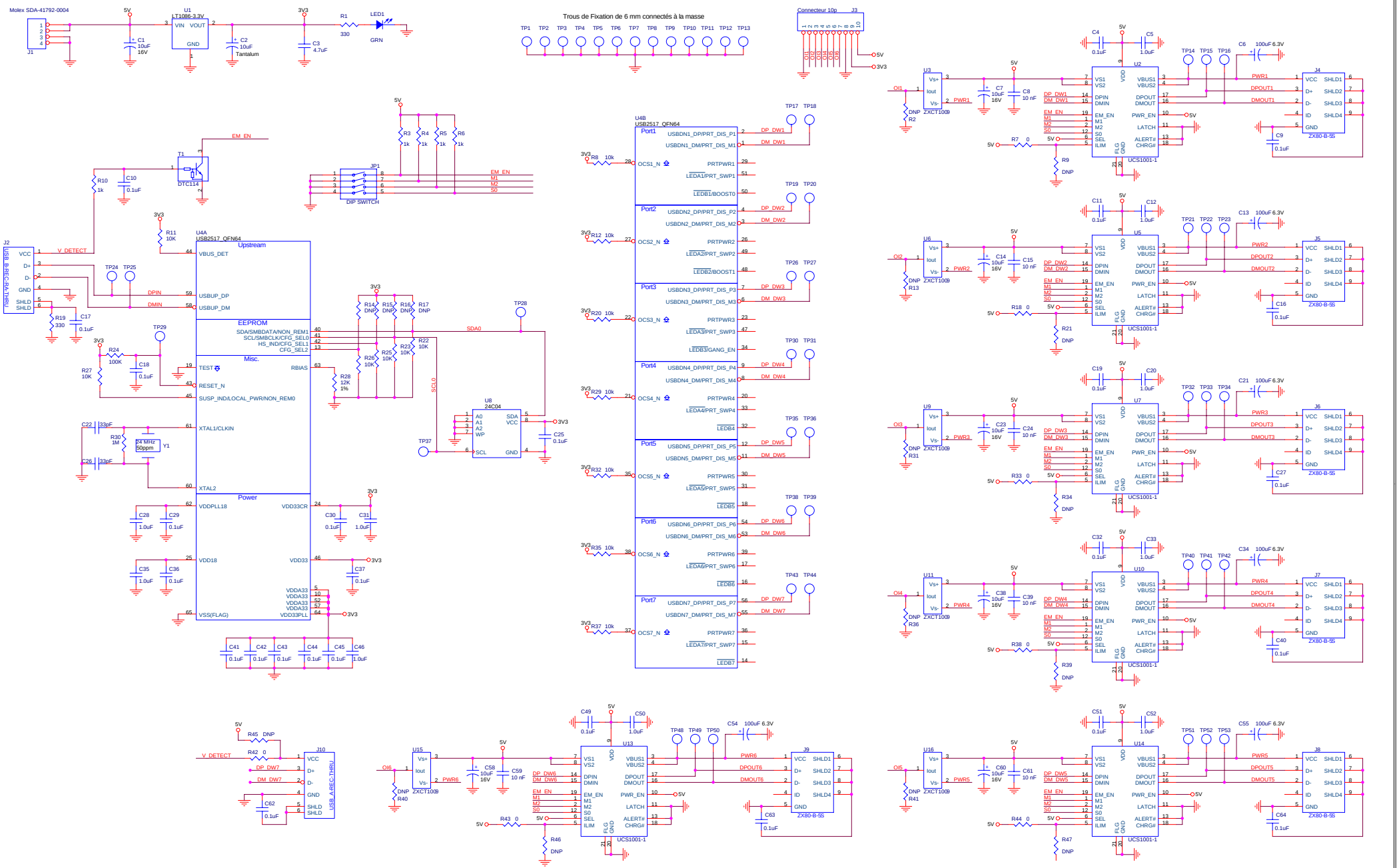

Title	**KALLYSTA**
	SAS6 Board
Size	Document Number: SAS6 Schematic — Rev 1.0
Date: Monday, August 26, 2013	Sheet 1 of 1